PULSAR TELOS Manual

Specifications
About the device
- Description
- Package contents
- Components and controls
- Features

Power supply
- Precautions
- Recommendations for Battery Use
- Battery Charging
- Battery Installation
- External Power Supply

Getting started
- Powering on and Image Settings
- Installation of the 3-point strap on the carrying case
- Button operation

Interface
- Status bar
- Quick menu
- Main Menu
  - Enter the Main Menu
    - Amplification Level
  - Defective Pixel Repair
    - Defective Pixel Repair
    - Restore Default Pixel Map

Functions
- USB Connection
- Installing the Device on a Tripod
- Stadiametric Rangefinder
- Display-Off Function
- Wi-Fi Function
- PiP Function
- Digital Zoom
- Video Recording and Photography

Software

Firmware Update
Stream Vision 2
Maintenance
Technical Maintenance and Storage
Technical Inspection
Troubleshooting
Legal Compliances and Disclaimers

Specifications

Model	**LRF XP50**
SKU	77492
Microbolometer	
Type	uncooled
Resolution, Pixels	640×480
Pixel Pitch, µm	17
NETD, mK	< 18
Frame Rate, Hz	50
Optical Characteristics	
Optical Magnification, x	2.5
Smooth Digital Zoom	2.5 -10
Digital Zoom, x	x1 – x4
Lens Focus, mm	50
Relative Aperture, D/f’	1.0
Minimum Focus Distance, m/y	5 / 5.5
Exit Pupil Diameter, mm/inch	4 / 0.16
Angular Field of View (Horizontal x Vertical), degree	12.4×9.3
Linear Field of View, m at 100 m	21.8
Eyepiece Focus Range, Dioptre	+4 / -5

Detection Distance for Deer-Sized Objects, m/y	1800 / 1969
Display	
Type	AMOLED
Resolution, Pixels	1024×768
Operational Characteristics	
Power Supply, V	3 – 4.2
Battery Type/Capacity/Nominal Output Voltage	LPS7i Li-ion Battery Pack / 6400 mAh / DC 3.7 V
External Power Supply	5 V, 9 V (USB Type-C)
Battery Run Time at t=22°C, hours*	8.5
Degree of Protection, IP Code (IEC60529)	IPX7
Operating Temperature Range, °C / °F	-25 ... +40 / -13 – +104
Dimensions, mm/inch	238×72×90 / 9.37×2.83×3.54
Weight (with battery), kg/oz	0.72 / 25.4
Video Recorder	
Photo/Video Resolution, Pixels	1024×768
Video/Photo Format	.mp4 / .jpg
Built-in Memory	64 GB
Wi-Fi Channel**	
Frequency	2.4/5 GHz
Standard	IEEE 802.11 b/g/n/ac
Characteristics of the Rangefinder	
Wavelength, nm	905
Measurement Range, m/y***	1000/1094

Measurement Accuracy, m	1

* Actual operating time depends on the extent of using Wi-Fi, integrated video recorder and integrated laser rangefinder.

** Reception range may vary depending on various factors: obstacles, other Wi-Fi networks.

*** Depends on the characteristics of the object under observation and environmental conditions.

About the device

Description

Telos LRF thermal imaging monoculars are designed for use both at night-time and during the day and provide exceptional image quality even in adverse weather conditions (fog, smog, rain) and beyond obstacles like branches, tall grass, dense foliage, etc. known to hinder target detection.

Unlike night-vision devices based on electron-optical converters, thermal imaging devices do not need an external light source and are resistant to bright light.

Telos LRF thermal imagers are designed for various applications including hunting, observation, security, terrain orientation, search and rescue operations, etc.

Telos LRF thermal imagers are equipped with a built-in laser rangefinder with a range of up to 1000 m and a measurement accuracy of ± 1 m.

Package contents

- Telos LRF thermal imager
- LPS7i battery pack with protective cover
- Spare battery compartment cover
- Power adapter
- USB Type-C cable with USB Type-A adapter
- Case
- Hand strap
- Quick start guide
- Lens cloth
- Warranty card

Components and controls

1. Lens cover

2. Laser rangefinder
3. Lens focus ring
4. Digital zoom adjustment ring
5. Battery compartment
6. LPS7i battery
7. Battery compartment cover
8. Battery protective cover
9. ON/OFF/Calibration button
10. UP/REC button
11. MENU button
12. DOWN/LRF button
13. Eyepiece diopter adjustment ring
14. Tripod adapter (available separately)
15. Operation status LED indication
16. Microphone
17. USB Type-C connector
18. LED indication of battery charge in the device

LED indicator **(15)** displays the current status of the device:

LED Indicator	Operating Mode
🟢	Device is turned on
🟢	The device is turned on/video recording
🔴	The device is turned on/battery charge < 10%
🔴	The device is turned on/video recording/battery charge < 10%

Features

- Functional and ergonomic design

- 8-colour display palette
- 3 calibration modes: Manual, Semi-Automatic, Automatic
- Detection range up to 1800 m/1969 yds
- Smooth digital zoom 2.5-10x
- Three levels of sensitivity enhancement: Normal, High, Ultra
- Integrated laser rangefinder
- Display-Off function
- Defective pixel repair
- Updatable firmware
- Wide operating temperature range (-25°C to +40°C / -13°F to +104°F)
- Fully waterproof (IPX7 rated)

Video/Audio Recording

- Built-in video and sound recorder
- Integration with iOS and Android devices
- Wi-Fi remote control and viewing using a smartphone
- Storing photos and videos in Cloud when using the Stream Vision 2 App

Battery Pack

- Quick Change Li-Ion Battery Pack LPS7i
- Charging from USB Power Bank
- Quick-Charge power delivery

Power supply

Precautions

- It is not recommended to charge the battery with the USB cable and wireless charger at the same time. This will not increase the charge rate and may damage the battery.
- Use the USB Type-C cable and power adapter supplied with the device (or purchased separately) to charge the LPS 7i batteries.
- Follow the safety precautions described in its Manual when using the wireless charger.
- Do not place any foreign objects between the battery and wireless charger platform.
- Do not charge the battery immediately after bringing it from cold to warm. Wait at least 30 minutes for the battery to warm up.
- Do not leave the battery unattended while charging.
- Do not use the power adapter and wireless charger if they have been modified or damaged.
- Do not leave the battery plugged in after charging is complete.
- Do not expose the battery to high temperatures and naked flame.
- Do not use the battery as a power source for devices that do not support LPS 7i batteries.
- Do not disassemble or deform the battery.
- Do not drop or strike the battery.
- Do not submerge the battery.
- Keep the battery out of the reach of children.

Recommendations for Battery Use

- The battery should be partially charged (50 to 80 %) for long-term storage.

- Charge at an ambient temperature of 0°C to +35°C (32°F to 95°F) or the lifespan of the battery will decrease significantly.
- Using the battery at sub 0°C (<32°F) ambient temperature decreases battery capacity. This is normal and not a defect.
- Using the battery at temperatures outside the range of -25°C to +50°C (-13°F to 122°F) may reduce battery life.
- The battery is short-circuit protected. Any situation that may cause short-circuiting should be avoided.

Battery Charging

The **Telos LRF** thermal imager comes with an LPS7i rechargeable Lithium-ion battery. LPS7i batteries support USB Power Delivery fast charging technology when using a standard charging set (USB Type-C cable, power adapter). Before first use, make sure the battery is fully charged. LPS 7i batteries also support wireless charging.

The icon in the status bar will flash when the battery is low. The battery needs to be charged.

Option 1. USB Charging

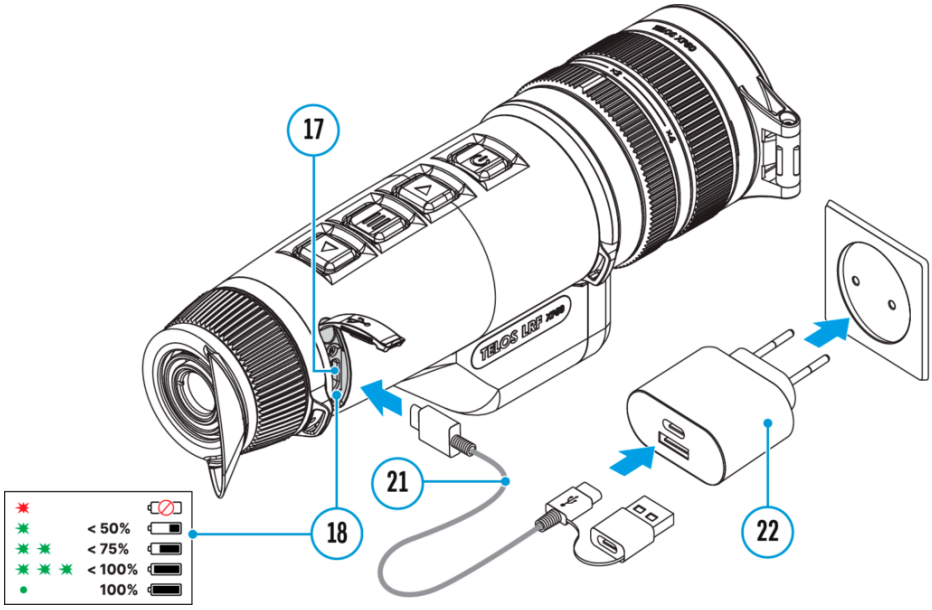

1. Install the LPS7i battery in the battery compartment of the device.
2. Connect the USB cable **(21)** to the USB Type-C connector **(17)** of the device.
3. Connect the other end of the USB cable **(21)** to the Power Adapter **(22)** by removing the USB Type-A adapter.
4. Plug the Power Adapter **(22)** into a 100-240 V socket**.**
5. Wait until the battery is fully charged (indication in the status bar:).

If the device is off, the LED indicator (18) will display the battery charge status:

LED indication	Battery charge status
●	Battery defective. Do not use the battery!
✸	Battery charge level is from 0% to 50%
✸✸	Battery charge level is from 51% to 75%
✸✸✸	Battery charge level is from 76% to 99%
●	Battery is full

Option 2. Charging the battery via USB

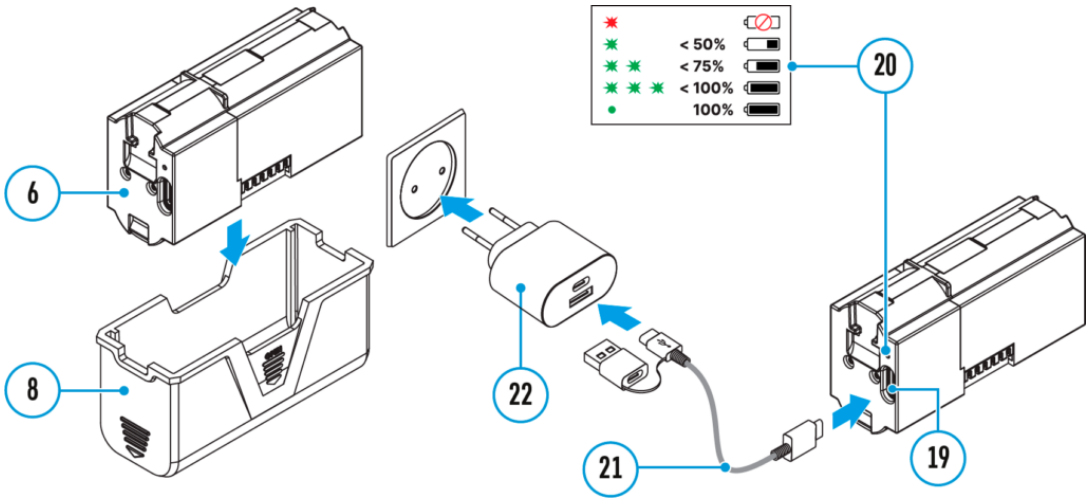

1. Remove the protective cover **(8)**.
2. Connect the plug of the USB Type-C cable **(21)** to the USB Type-C connector **(19)** of the battery.
3. For fast charging, connect the second end of the USB Type-C cable **(21)** to the Type-C connector of the power adapter **(22)** by removing the Type-A adapter from the plug. When connected to a computer or a Type-A power adapter, the battery will charge at normal speed.
4. Plug the power adapter **(22)** into a 100-240 V socket.
5. LED **(20)** will display battery charge level (see Table).

LED indication	Battery charge status
●	Battery defective. Do not use the battery!
✸	Battery charge level is from 0% to 50%
✸ ✸	Battery charge level is from 51% to 75%
✸ ✸ ✸	Battery charge level is from 76% to 99%
●	Battery is full

Option 3. Wireless Charging

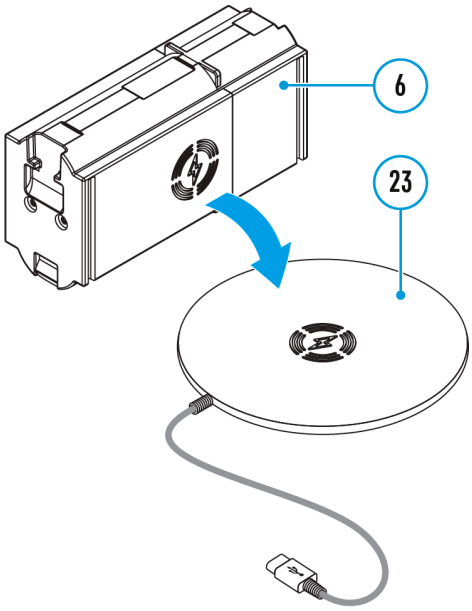

1. Place the battery **(6)** with the sign side on the wireless charger* **(23)**. For more efficient wireless charging, align the lightning bolt icon on the battery with the centre of the charger platform **(23)**.
2. Turn on the wireless charger according to its instruction manual.
3. LED **(20)** will display battery charge level (see Table).

* Third party-purchasing. The LPS7i battery works with all QI standard wireless chargers.

Note: Charging with a USB cable is significantly faster than using a wireless charger.

Battery Installation

1. Install the cover **(7)** on the LPS7i battery **(6)**.

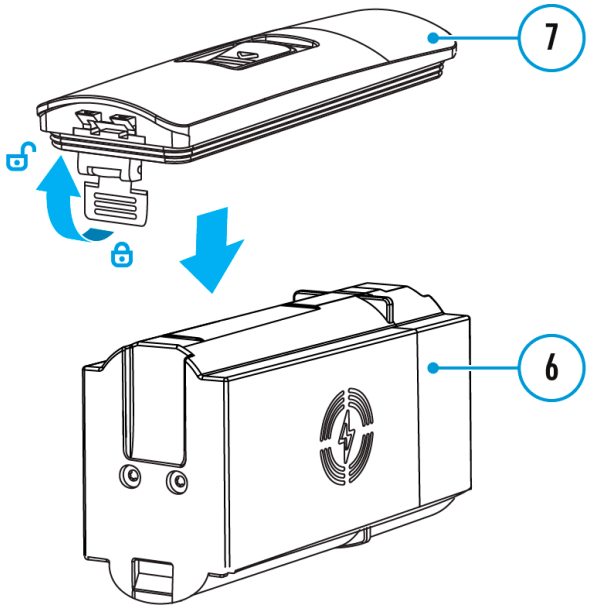

2. Insert the battery **(6)** into the battery compartment **(5)** until you hear a click. The battery contacts must face the top of the device (see diagram).

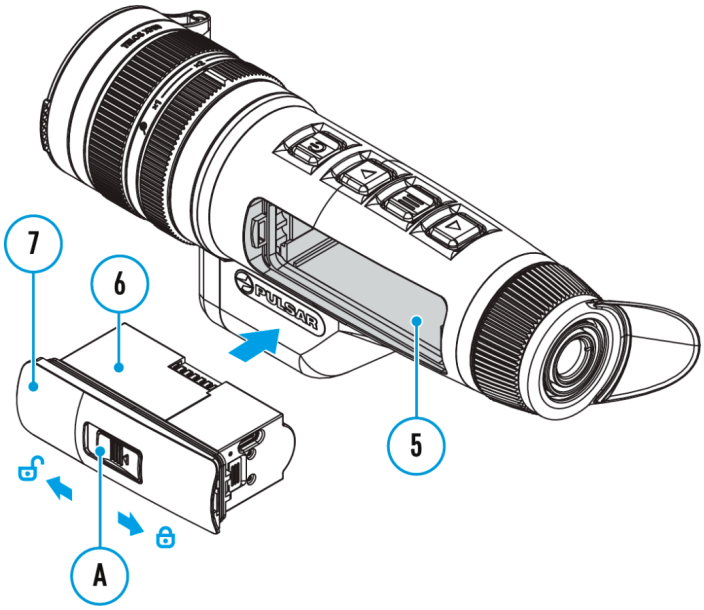

3. To remove the battery **(6)**, slide the switch **(A)** on the cover **(7)** to the left .

External Power Supply

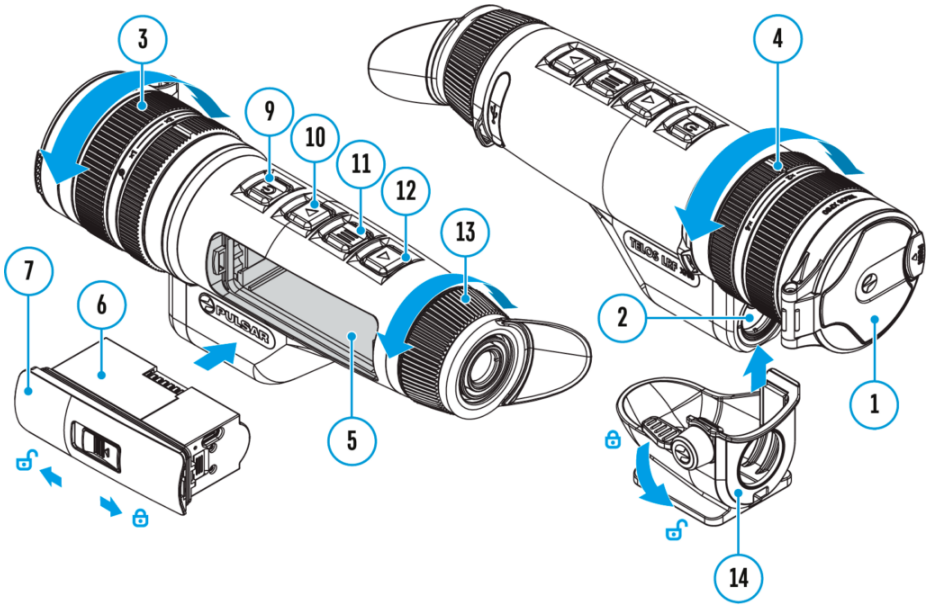

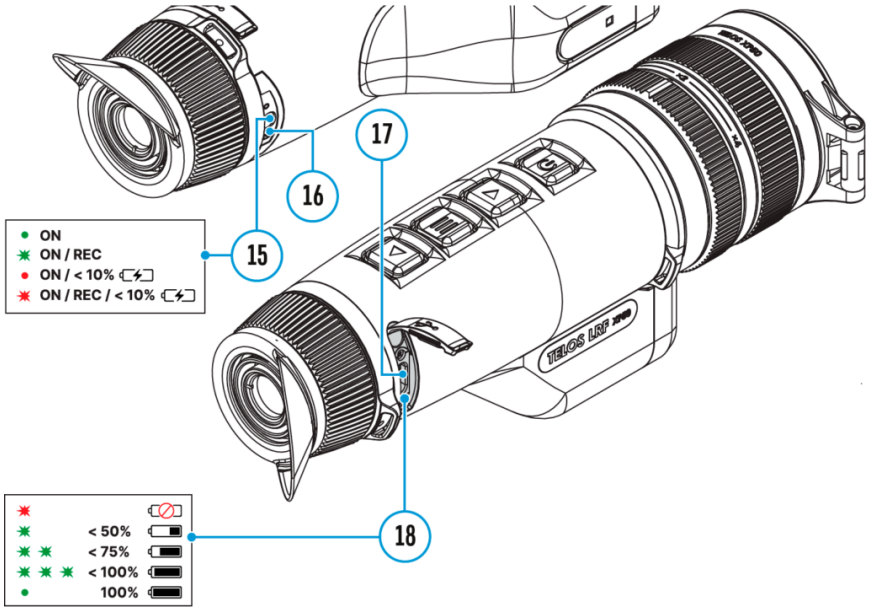

Power can be supplied from an external source such as a 5 V or 9 V power bank.

1. Connect the external power source to the USB Type-C connector **(17)** on the device.
2. The device will switch to draw power from the external source while the LPS7i battery is gradually recharged.
3. A battery icon

will appear on the display showing the percentage-charged level.

will appear on the display showing the percentage charged level.

4. An icon

will be displayed when the device is powered by an external power source and the LPS7i battery is not connected.

5. The device automatically switches to the LPS7i battery when the external power supply is disconnected.

Attention! Charging LPS7i batteries from an external source at temperatures below 0°C (<32°F) can reduce battery life. When using external power, connect the power bank to the device only after it has been turned on and working (warming) for at least several minutes.

Getting started

Powering on and Image Settings

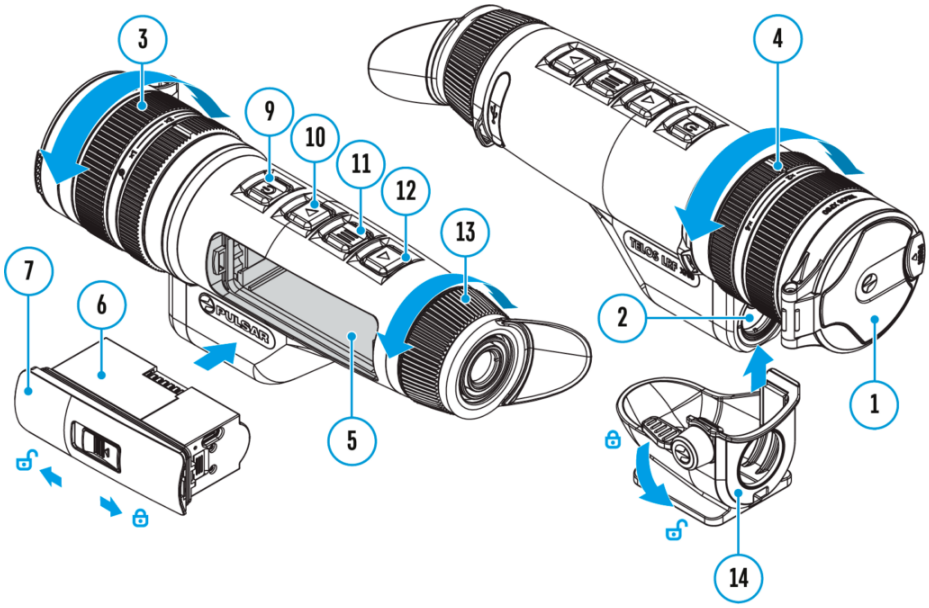

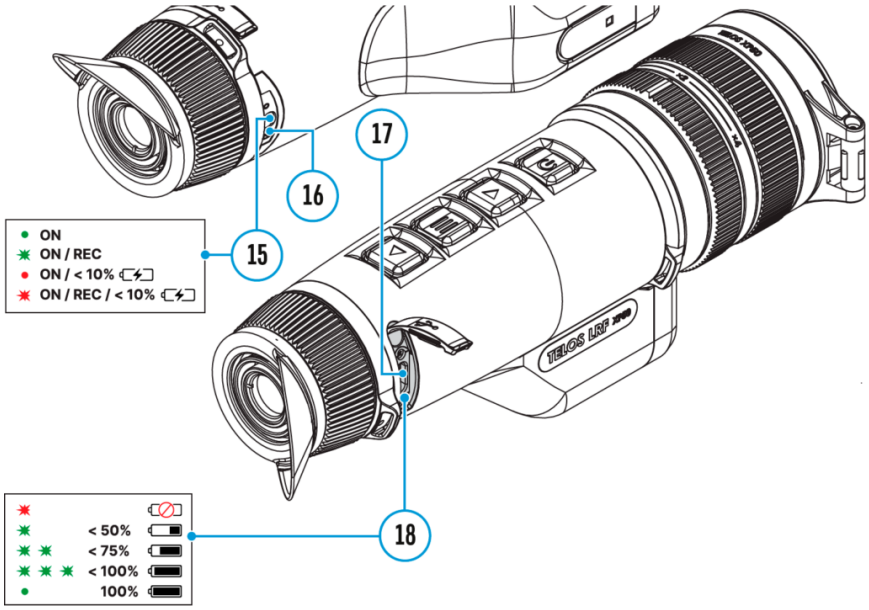

1. Open the lens cover **(1)**.
2. Press the **ON/OFF (9)** button briefly to turn on the device.
3. Adjust the eyepiece diopter ring **(13)** until the symbols in the display are sharp.
4. Rotate the lens focus ring **(3)** to focus on the object being observed.
5. To change the magnification, turn the digital zoom adjustment ring **(4)**.

6. Enter the main menu with a long press of the **MENU (11)** button and select the desired **calibration mode**: manual (M), semi-automatic (SA) or automatic (A).
7. Calibrate the image by briefly pressing the **ON/OFF (9)** button (if the SA or M calibration mode has been selected). Close the lens cover when calibrating manually.
8. Activate the quick menu by briefly pressing the **MENU (11)** button to adjust the brightness and contrast of the display and select the desired **amplification level** (**"Normal"** N, **"High"** H, **"Ultra"** U (for more details see the **Quick Menu** section).
9. Activate the **smoothing filter** in the main menu to improve the image as the amplification level increases.
10. Select one of the colour palettes in the main menu (for more details see the **Colour Modes** section).
11. Upon completion of use turn the device off by a long press of the **ON/OFF (9)** button.

Observation conditions: time of day, weather, type of observation objects affect the image quality. Custom settings for brightness, display contrast as well as the function of adjusting the microbolometer sensitivity amplification level will help to achieve the desired quality in a particular situation.

Warning! Never point the lens at intensive energy sources such as laser radiation emitting devices or the sun. It can damage electronic components in the device. The warranty does not cover damage arising from failure to comply with operating instructions.

Adjusting the position of the hand strap

Installation of the 3-point strap on the carrying case

The carrying case comes with 3-point-strap for comfortable carrying of the case on the chest during intensive movement.

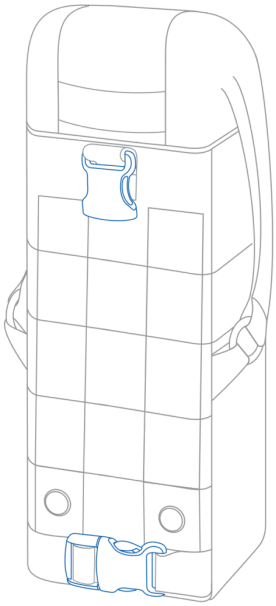

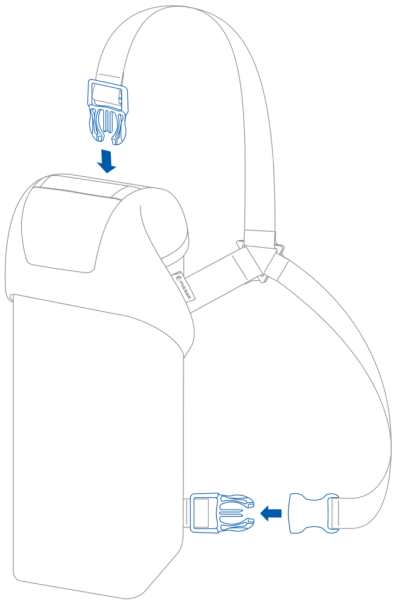

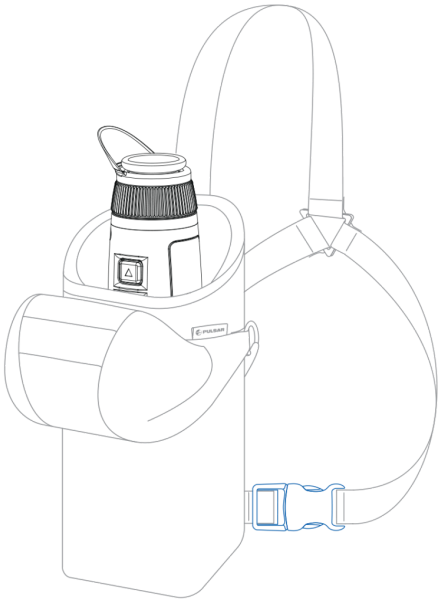

Button operation

Operation	Button
Power device on	⏻ short press
Power device off	⏻ long press for 3 secs
Turn display off	⏻ long press for less than 3 secs
Turn display on	⏻ short press
Calibrate the microbolometer	⏻ short press
Turn on/off the White Hot palette	⏻ long press
Video Recorder	**Button**
Start/pause/resume video recording	△ short press
Stop video recording	△ long press
Switch to video / photo	△ long press
Capture a photo	△ short press
Laser Rangefinder	**Button**

Turn on rangefinder	▽	short press
Single distance measurement	▽	short press
Activate rangefinder scan mode	▽	long press
Deactivate rangefinder scan mode	▽	short press
Turn off rangefinder	▽	long press
Main Menu	**Button**	
Enter main menu	|||	long press
Navigation upwards/rightwards	△	short press
Navigation downwards/leftwards	▽	short press
Confirm selection	|||	short press
Exit submenu without confirming selection	|||	long press
Exit menu (switch to viewing mode)	|||	long press
Quick Menu	**Button**	
Enter quick menu	|||	short press
Switch between quick menu options	|||	short press
Increase value	△	short press
Decrease value	▽	short press
Exit quick menu	|||	long press

Interface

Status bar

The status bar at the bottom of the display shows current operating statuses via icons, including:

- Colour Mode:

– White hot

– Black hot

- Amplification level

- Smoothing Filter (displayed when the function is on)
- Calibration Mode (in Automatic calibration mode a countdown timer will appear instead of the calibration mode icon 3 seconds before automatic calibration begins).
- Microphone
- Magnification
- Wi-Fi Connection
- Time
- Power Indication:

– charge level if the device is powered by a battery

– charge level if the device is charging and powered by a battery

– no battery, the device is connected to an external power supply

Quick menu

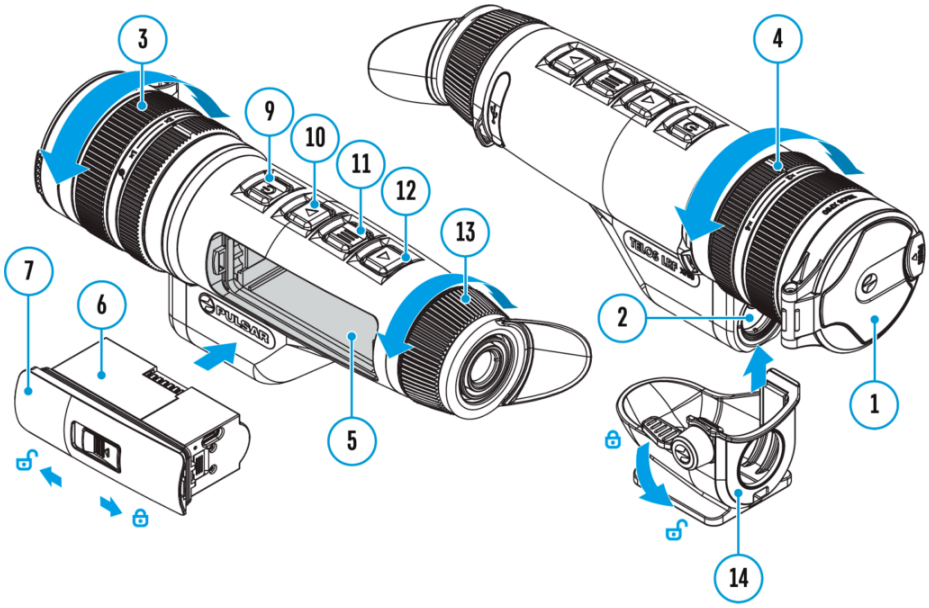

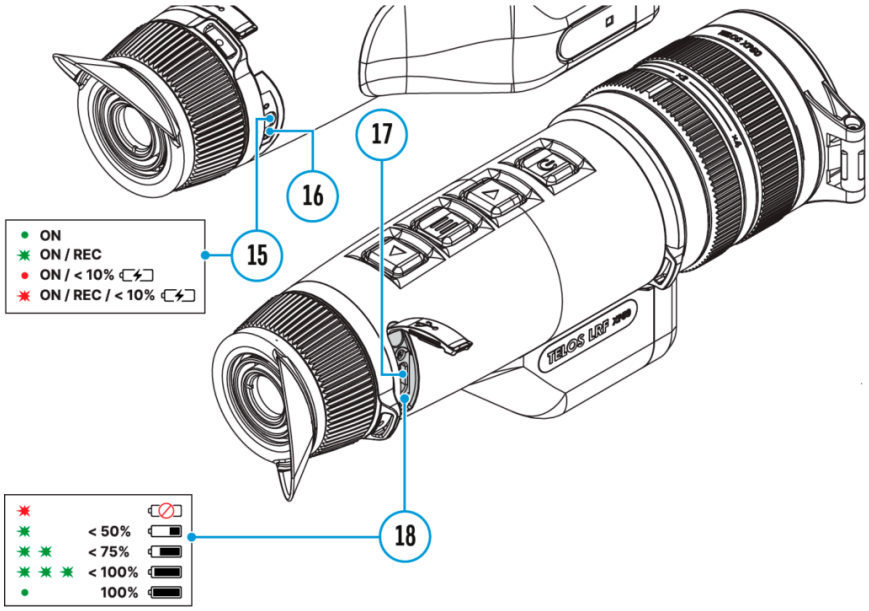

The quick menu is used to quickly access the settings for brightness, contrast, and amplification modes.

- Enter the menu by briefly pressing the **MENU (11).**
- A short press of the **MENU (11)** button enables you to toggle between functions, as described below.

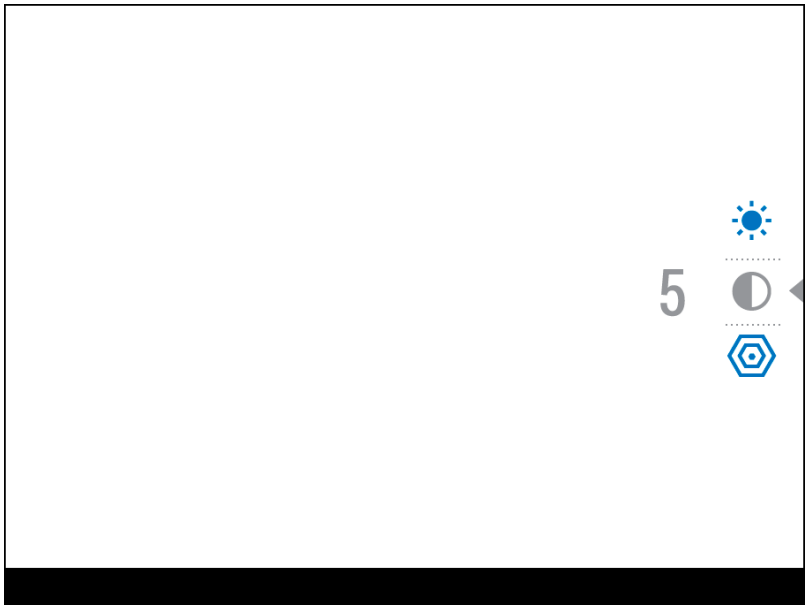

Brightness – press the **UP (10)/DOWN (12)** buttons to change display brightness from 0 to 20.

Contrast – press the **UP (10)/DOWN (12)** buttons to change image contrast from 0 to 20.

Note: display brightness and contrast settings are saved in the memory when the device is turned off.

Amplification Levels – allows you to select one of three **amplifying levels of sensitivity** (Normal N, High H, Ultra U).

Note: To maintain brightness and contrast settings when changing amplifying levels, activate **User Mode**.

- Press and hold the **MENU (11)** button to exit the menu or wait for 10 seconds to exit automatically.

Main Menu

Enter the Main Menu

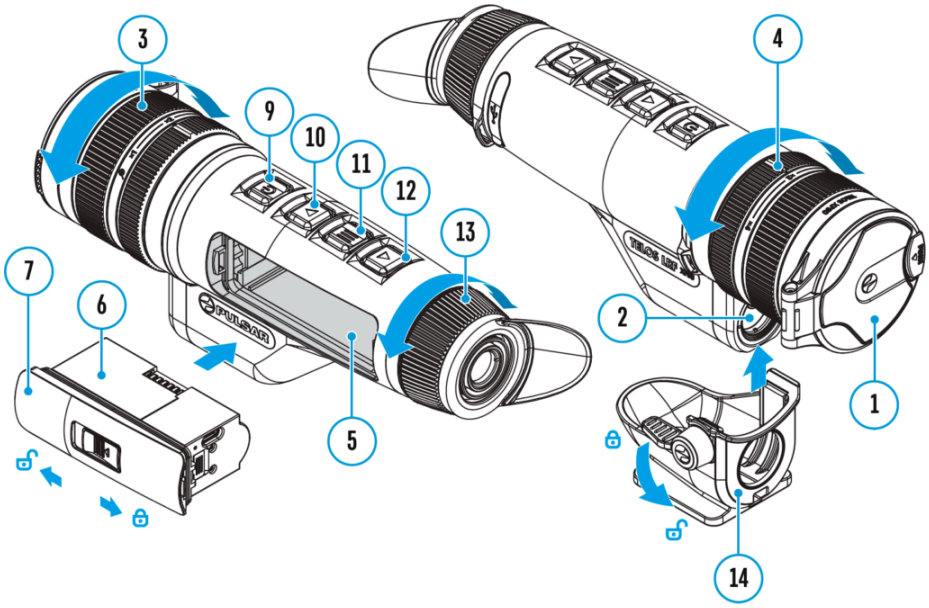

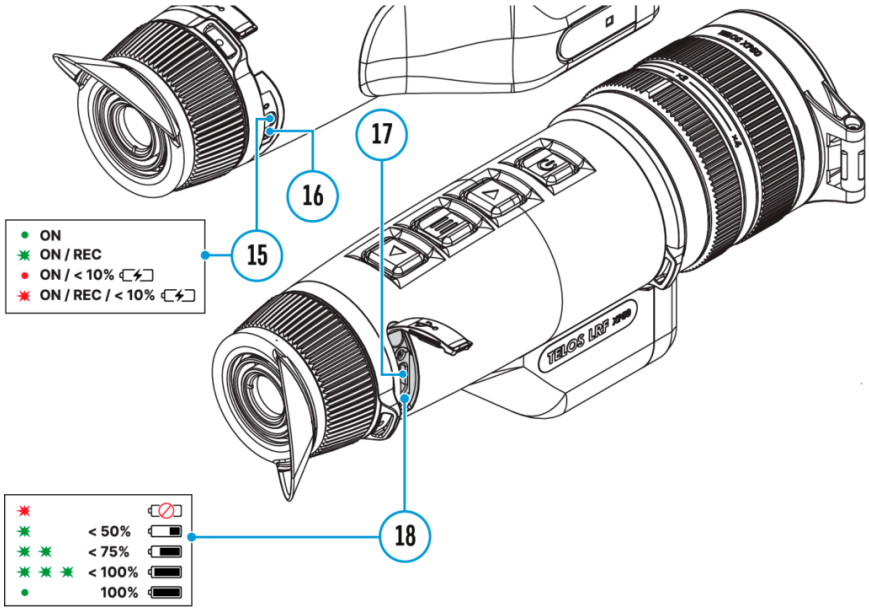

1. Enter the main menu with a long press of the **MENU (11)** button.
2. Press the **UP (10)/DOWN (12)** buttons to move through the menu items.
3. Press the **MENU (11)** button briefly to select the menu item.
4. Press and hold the **MENU (11)** button to exit the menu or wait for 10 seconds to exit automatically.

5. Automatic exit takes place after 10 seconds of inactivity.

Note: When entering the main menu, the background image darkens to enhance the menu visibility. This is normal and not a defect.

General View of Menu

Tab 1

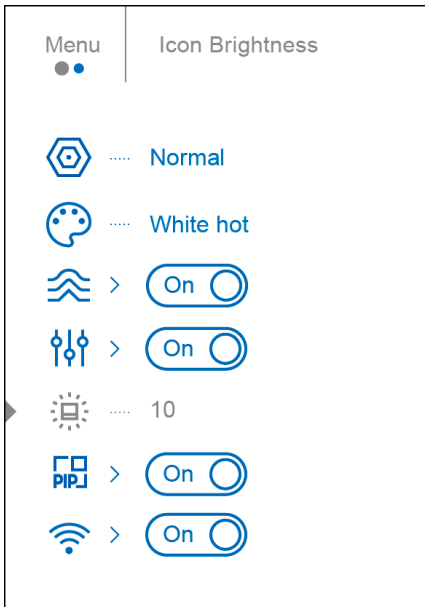

Tab 2

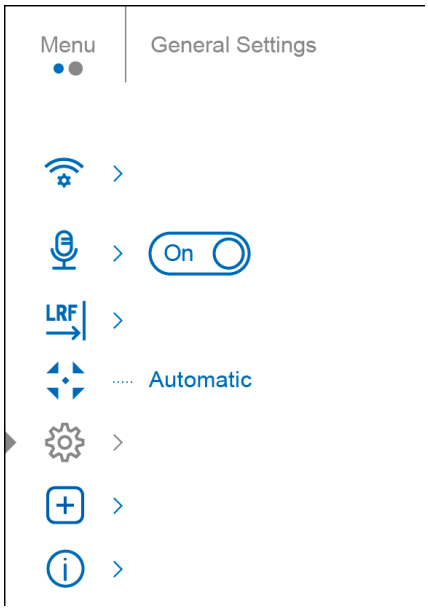

Amplification Level

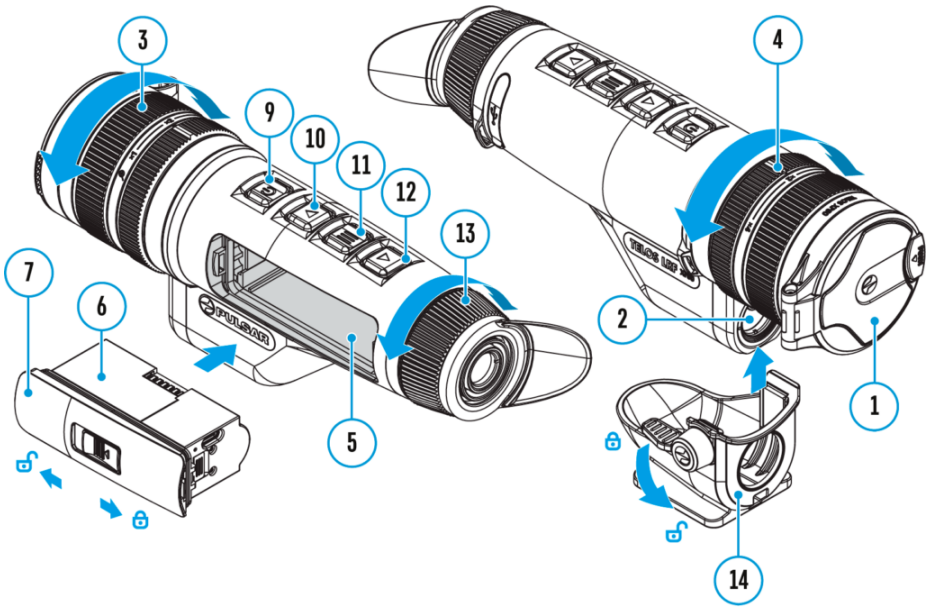

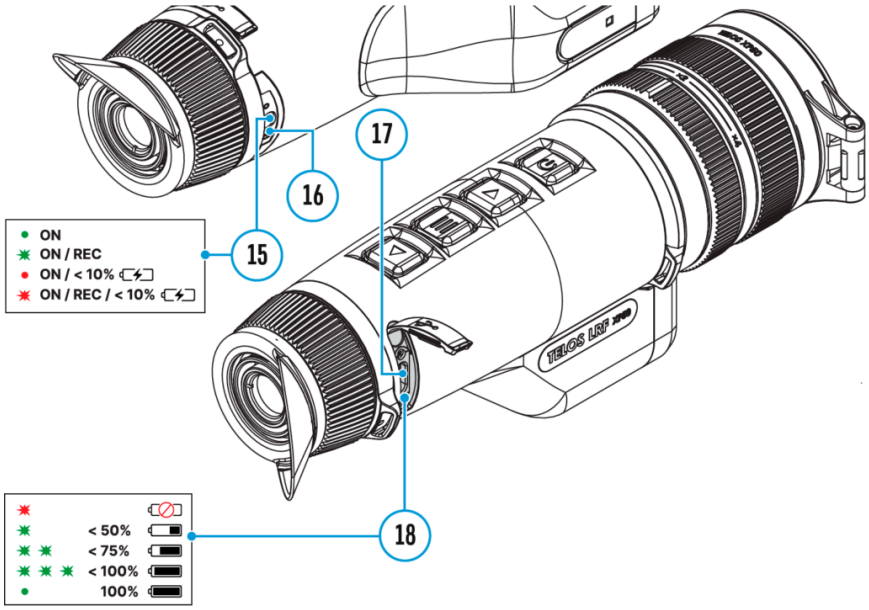

The Normal N, High H, Ultra U sensitivity enhancement features are the latest in software algorithm offerings from Pulsar that enhance the quality of detection and object recognition, regardless of observation conditions. When the temperature contrast decreases due to conditions such as fog, precipitation or high humidity, increasing the amplification level can optimize the image picture.

To reduce digital distortion, activate the **Smoothing Filter** in the main menu.

Normal

High

Ultra

Quick Menu:

1. Enter the quick menu by briefly pressing the **MENU (11)** button.
2. Briefly press the **MENU (11)** button to select the **Amplification Level** icon.
3. Use the **UP (10)/DOWN (12)** buttons to select one of three amplifying levels of sensitivity (Normal N, High H, Ultra U).
4. Press and hold the **MENU (11)** button to exit the menu or wait for 10 seconds to exit automatically.

Main Menu:

1. Press and hold the **MENU (11)** button to enter the main menu.
2. Use the **UP (10)/DOWN (12)** buttons to select the **Amplification Level** icon.
3. Press the **MENU (11)** button briefly to enter the Amplification Level submenu.
4. Use the **UP (10)/DOWN (12)** buttons to select one of three amplifying levels of sensitivity (Normal N, High H, Ultra U).
5. Press the **MENU (11)** button briefly to confirm the selection.

Defective Pixel Repair

Defective Pixel Repair

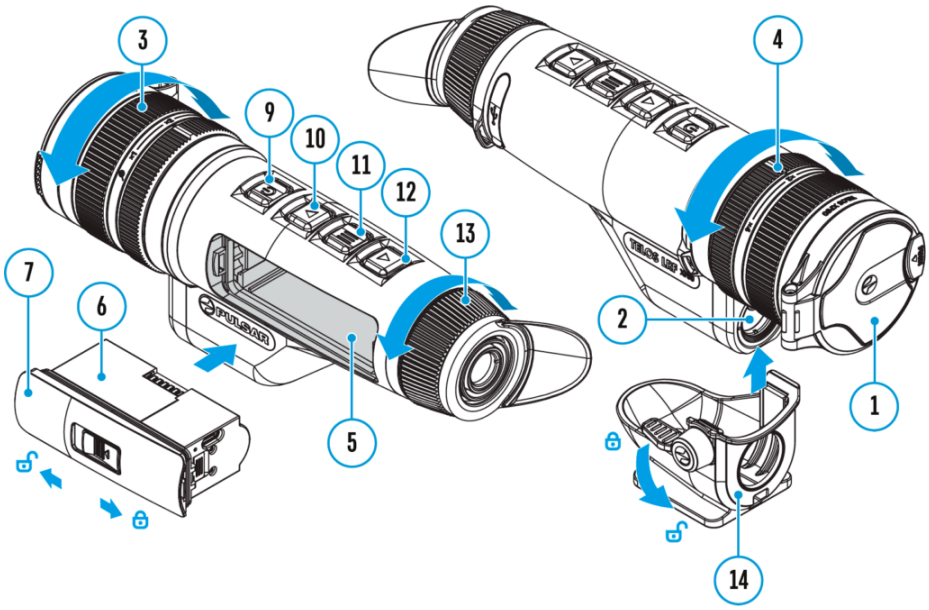

When using the device, defective (dead) pixels may appear on the microbolometer. These are bright or dark points of constant brightness that are visible on the image.

Defective pixels on the microbolometer can increase in size relative to the digital-zoom power.

Telos LRF thermal monoculars allows the user to remove any defective pixels on the display, as well as cancel removal, via the device's firmware.

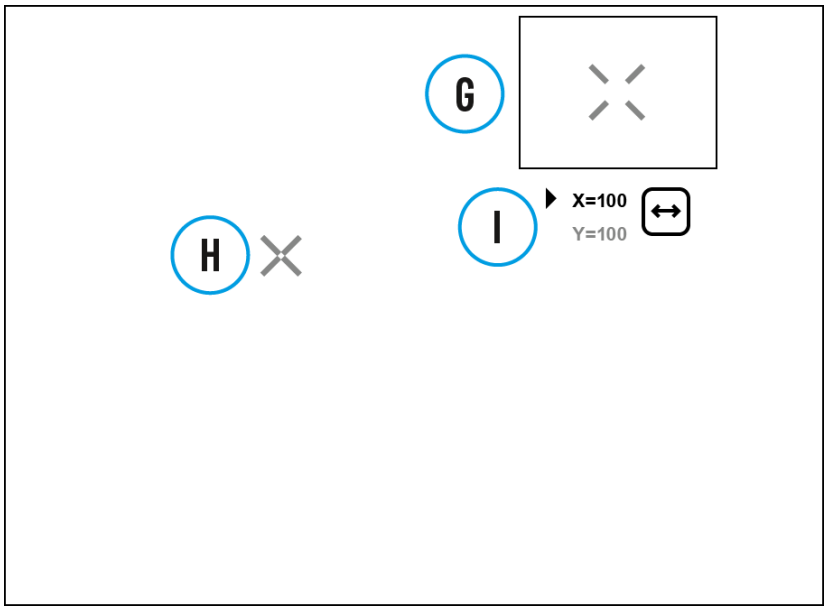

Step 1. Enter the menu to fix the defective pixels

1. Press and hold the **MENU (11)** button to enter the main menu.

2. Use the **UP (10)/DOWN (12)** buttons to select the **Defective Pixel Repair** menu item.

3. Press briefly the **MENU (11)** to open the submenu.
4. Select the **Defective Pixel Repair** option by briefly pressing the **MENU (11)** button.

Step 2. Select the defective pixel

1. A marker **(H)** appears on the left side of the display.
2. On the right side of the display appears a “magnifying glass” **(G)** – a magnified image in the frame with a fixed cross [fixed-cross], designed for easier detection of a defective pixel and to match the pixel with the marker, and horizontal and vertical arrows for X and Y axes **(I)** showing the marker’s movement.
3. With a short press of the **UP (10)/DOWN (12)** buttons move the marker to align it with a defective pixel.
4. Switch the direction of the marker from horizontal to vertical and vice versa with a short press of the **MENU (11)** button**.**
5. Align the defective pixel with the fixed cross in the frame – the pixel should disappear.

Step 3. Remove the defective pixel

1. Delete the defective pixel with a short press of the **ON/OFF (9).**
2. Once the pixel has been successfully deleted an *“OK”* message will briefly appear on the screen.
3. You can then delete another defective pixel by moving the marker across the display.
4. Exit the Defective Pixel Repair submenu with a long press of the **MENU (11).**

Warning! The display of a thermal imager may have 1- 2 pixels represented as bright white or coloured (blue, red) dots which cannot be deleted and are not a defect.

Restore Default Pixel Map

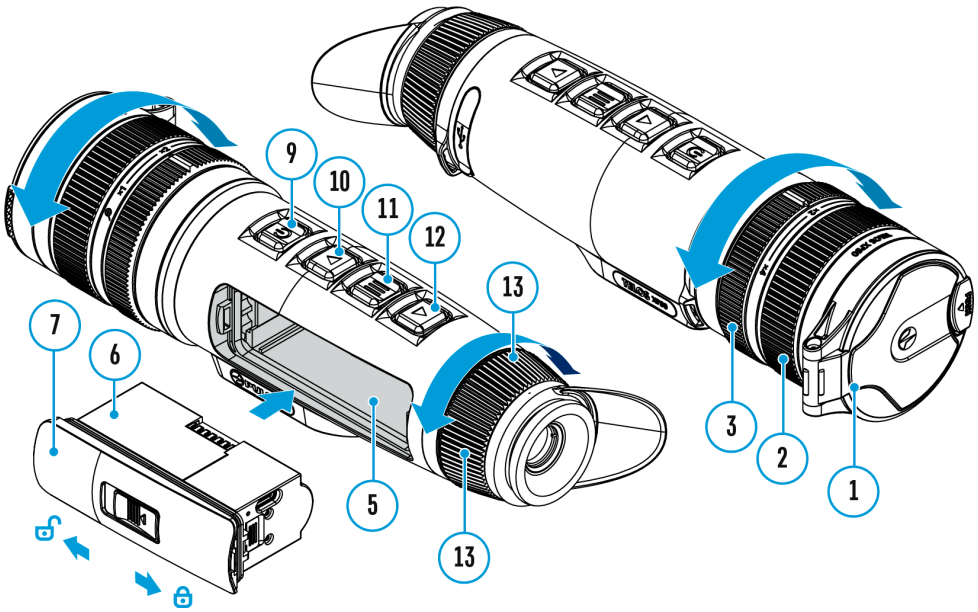

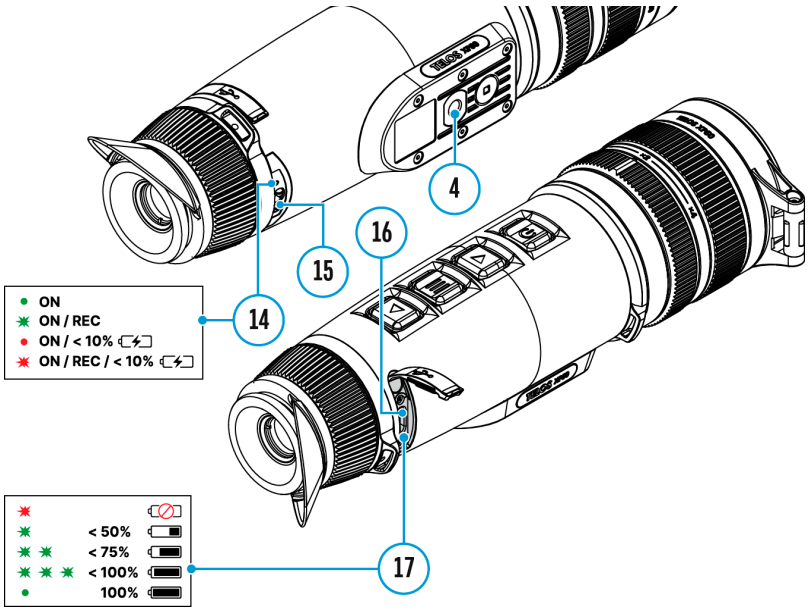

This option allows the user to return all previously disabled defective pixels to their original state.

1. Press and hold the **MENU (11)** button to enter the main menu.
2. Use the **UP (10)/DOWN (12)** buttons to select the **Defective Pixel Repair**

icon.

3. Press the **MENU (11)** button to enter the submenu.
4. Use the **UP (10)/DOWN (12)** buttons to select the **Restore Default Pixel Map**

icon.

5. Activate the function by briefly pressing the **MENU (11)**.
6. Using the **UP (10)/DOWN (12)** buttons, select *Yes* if you want to return to the factory pixel map and select *No* if you do not.
7. Confirm your selection with a short press of the **MENU (11)**.

Functions

USB Connection

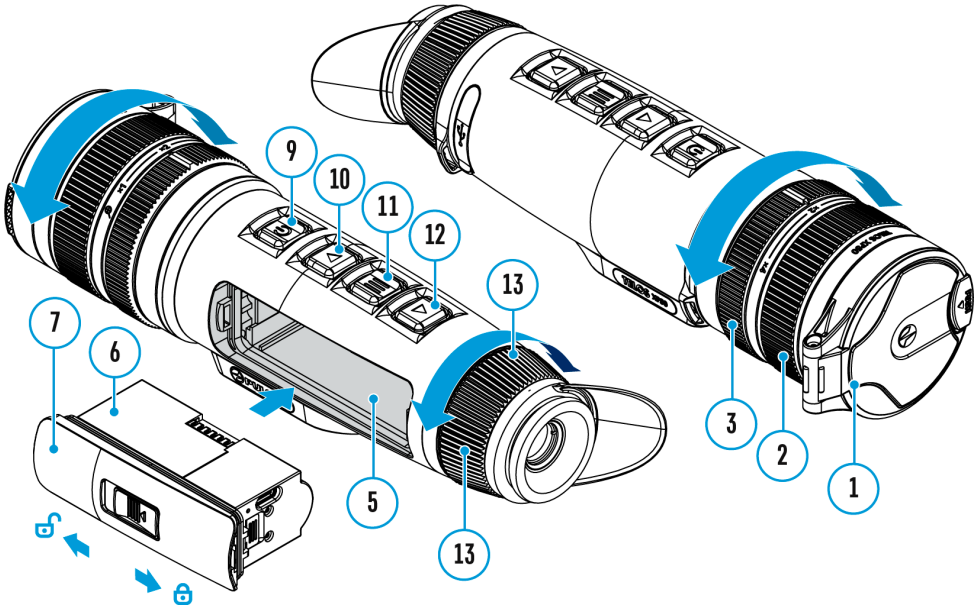
1
2
3
5
6
7
9
10
11
12
13
13

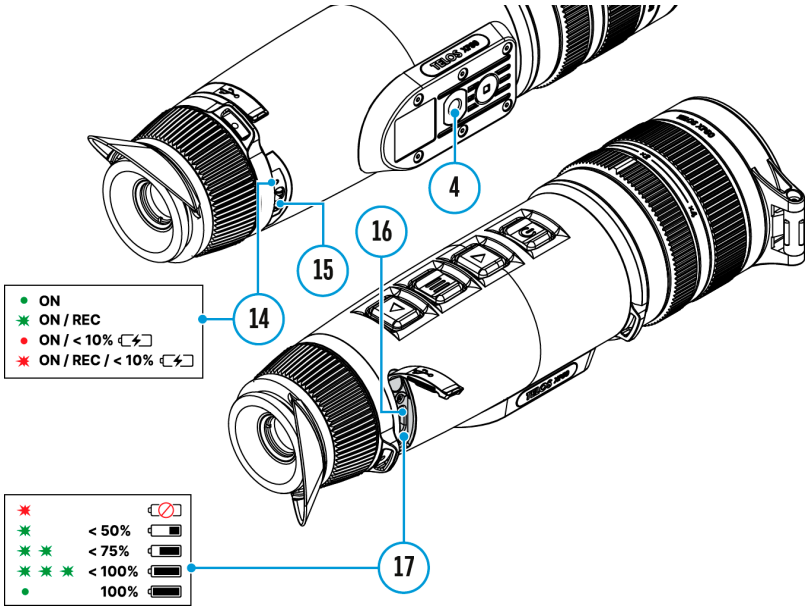
4
14
15
16
17
ON
ON / REC
ON / < 10%
ON / REC / < 10%
< 50%
< 75%
< 100%
100%

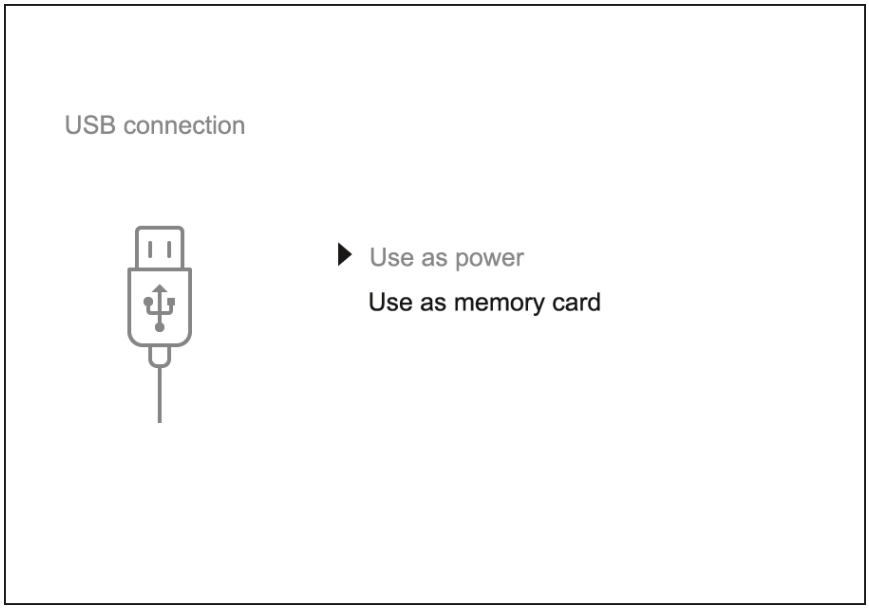

1. Connect one end of the USB cable to the USB Type-C port **(16)** of your device and the other end to the USB port of your PC / laptop using a USB Type-A adapter.
2. Turn the device on with a short press of the **ON/OFF (9)** button (a device that has been turned off cannot be detected by your computer).
3. Your device will be detected by the computer automatically; no drivers need to be installed.
4. Two connection modes will appear on the display: **Power** and **Memory Card** (external storage device).
5. Select the connection mode with the **UP (10)/DOWN (12)** buttons.
6. Confirm the selection with a short press of the **MENU (11)** button.

Power

- In this mode, a PC/laptop is used as an external power supply. The status bar shows the icon

  . The device continues operating and all functions are available.
- Battery recharge feasibility depends on your computer's USB port.
- When the USB is disconnected from the device when in the **Power** mode, the device keeps operating with the Battery Pack if it is available and sufficiently charged.

Memory Card (external memory)

- In this mode the device is detected by the computer as a flash card. This mode is designed for work with the files saved in the device's memory. The device's functions are not available in this mode; the device turns off automatically.
- If video recording was in progress when the connection was made, recording stops and the video is saved.

- If the device is in **Memory Card** mode and is disconnected from USB, the device will remain on.

Installing the Device on a Tripod

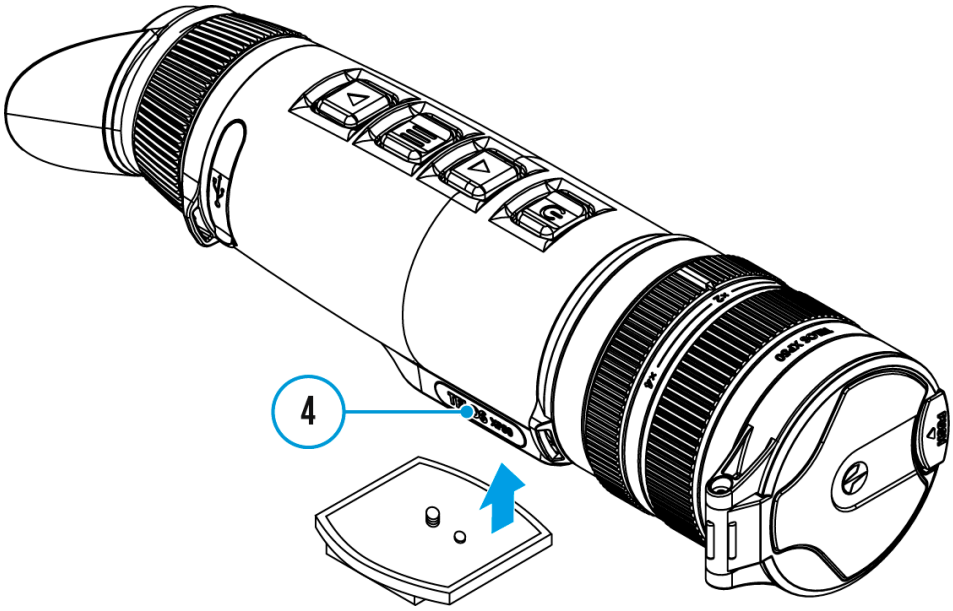

1. Screw the tripod mounting plate into the socket **(4)** as far as it will go.
2. Mount the Telos device with mounting plate on the tripod.

Stadiametric Rangefinder

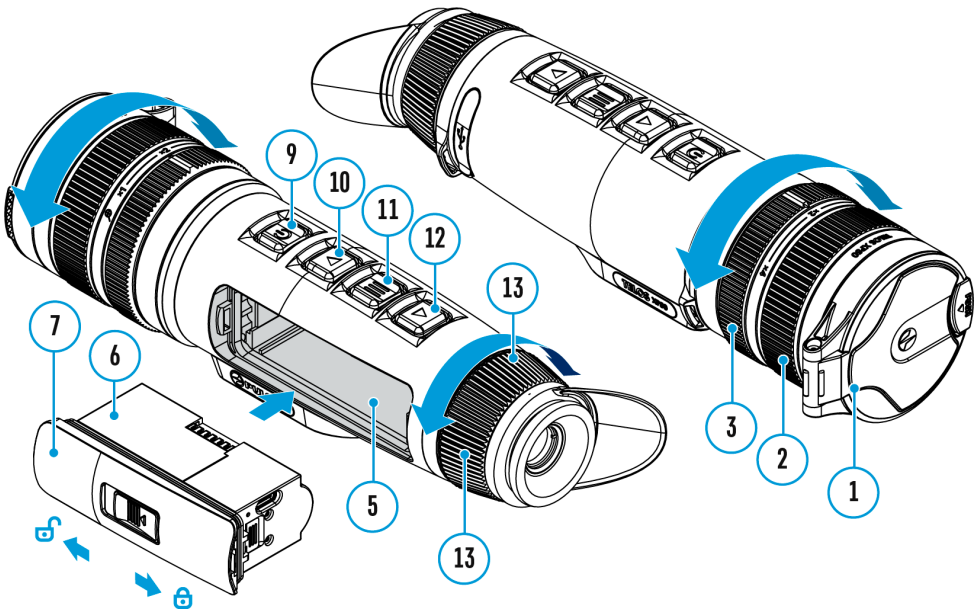

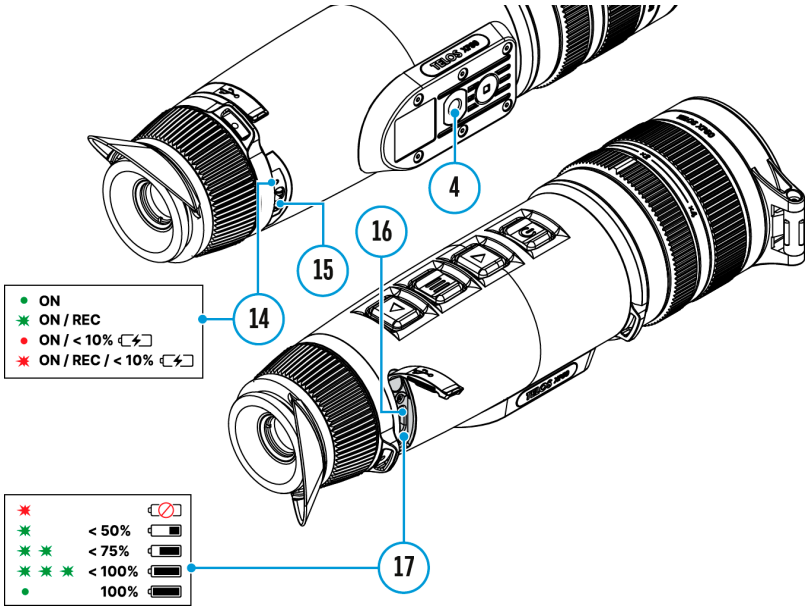

Telos thermal imagers are equipped with a stadiametric rangefinder which allows the user to determine the approximate distance to an object of a known size with reasonable accuracy.

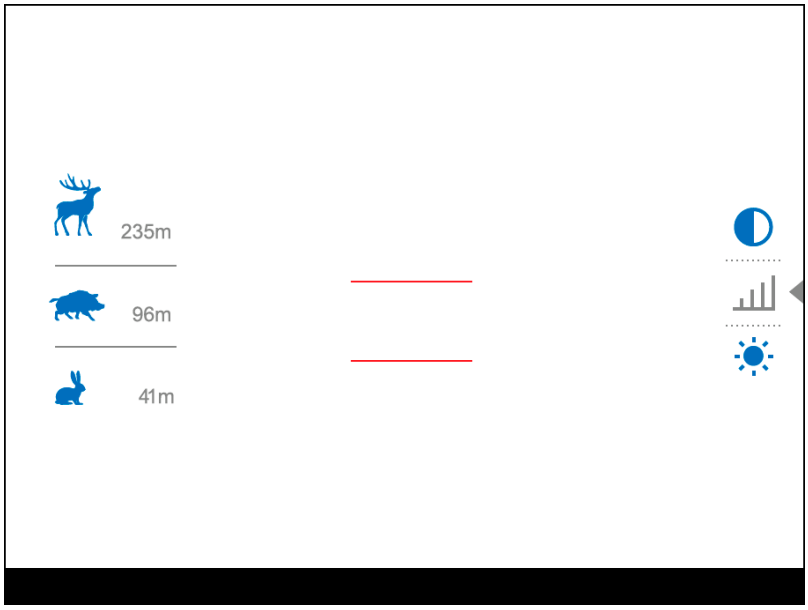

1. To select the **Stadiametric Rangefinder** function, enter the **Quick Menu** by briefly pressing the **MENU (11)** button.
2. Press the **MENU (11)** button briefly to select the icon

.

3. You will see on the display: measurement bars, icons of three reference objects and respective distances for the three objects.
4. Position the lower fixed bar under the object being ranged.
5. By pressing the **UP (10)/DOWN (12)** buttons, move the upper horizontal bar relative to the lower fixed bar until the object fits entirely between the two bars. The distance to the object is automatically recalculated as you move the upper line.
6. Exit the rangefinder mode with a long press of the **MENU (11)** button or wait 10 seconds to exit automatically.

Notes:

- There are three predefined values for the reference objects: Hare – 0.3 m height, Boar – 0.7 m height, Deer – 1.7 m height.
- Before it appears on the display, a measured distance value is rounded up to 5m for larger values and rounded down to 1m for smaller values.
- To select the unit of measurement (Meters or Yards), go to the **General Settings**

menu item ⇒ **Units of Measure**

submenu.

Display-Off Function

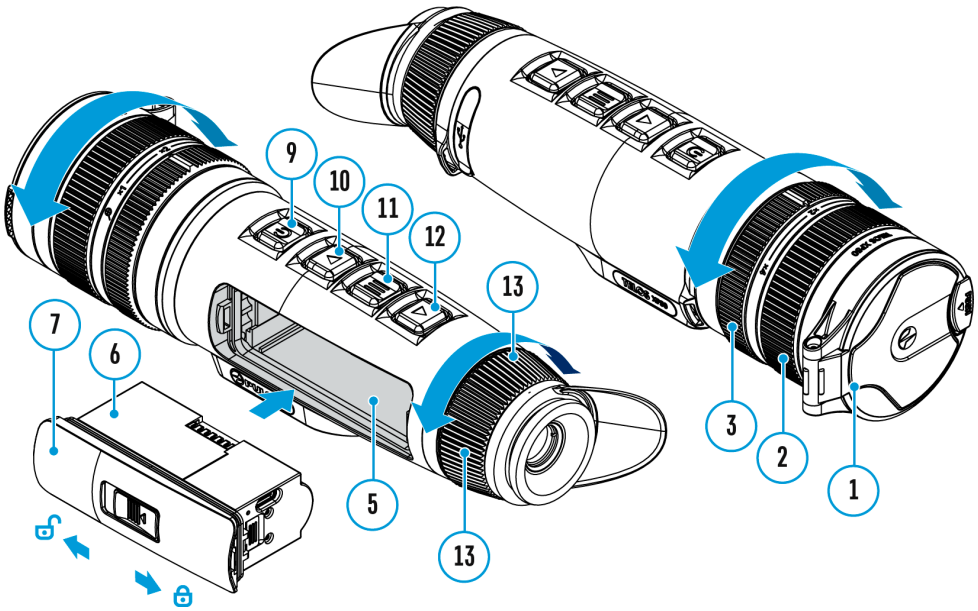

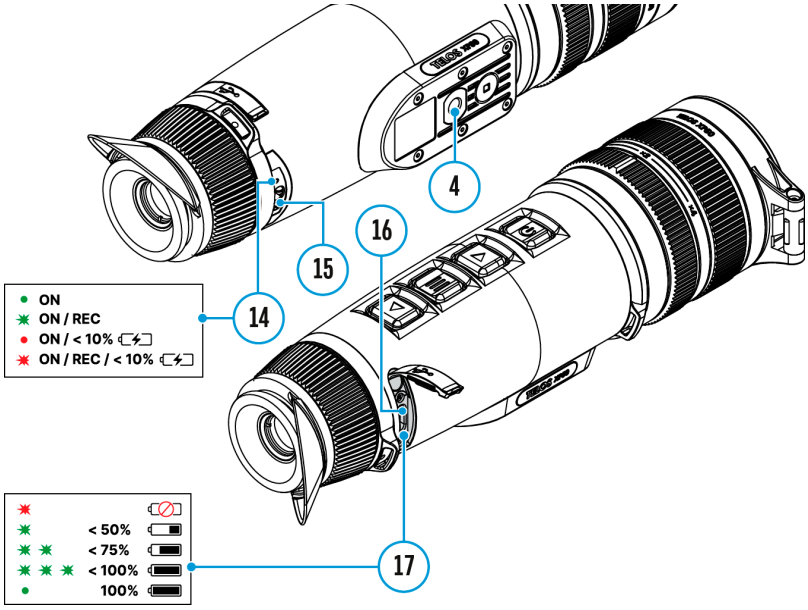

This function darkens the screen, which aids the user's concealment. However, the device stays on.

When this function is in use, the device switches to the standby mode, which allows it to be switched on instantly.

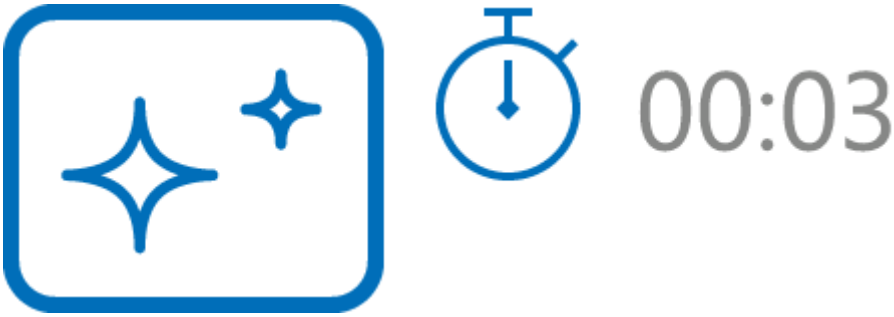

---

1. When the device is on, press and hold the **ON/OFF (9)** button. The display will turn off, the current time and the **"Display off"** icon will appear.
2. Turn the display back on with a short press of the **ON/OFF (9)** button.
3. When you press and hold the **ON/OFF (9)** button, the display shows the **"Display off"** icon with a countdown. Pressing & holding the button down for the duration of the countdown will power the device off completely.

Wi-Fi Function

The device has a function enabling wireless communication with external devices (smartphone or tablet) via Wi-Fi.

- Turn on the wireless module in the **WI-Fi Activation**

  menu option.

Wi-Fi is displayed in the status bar as follows:

Indication on the status bar	Connection Status
	Wi-Fi is switched off
	Wi-Fi connection is in progress
	Wi-Fi is switched on, no connection with device
	Wi-Fi is switched on, device connected

- The device is recognized by an external device as TELOS_XXXX where XXXX are the four last digits of the serial number.
- After entering the password on a mobile device (see **Password Setup** subsection of the **Wi-Fi Settings** section for more information on setting a password) and setting up a connection, the icon

  in the status bar will change to

  .
- The Wi-Fi function will turn off automatically if there is not enough battery power for Wi-Fi. To use the Wi-Fi function again, you need to charge the battery.

PiP Function

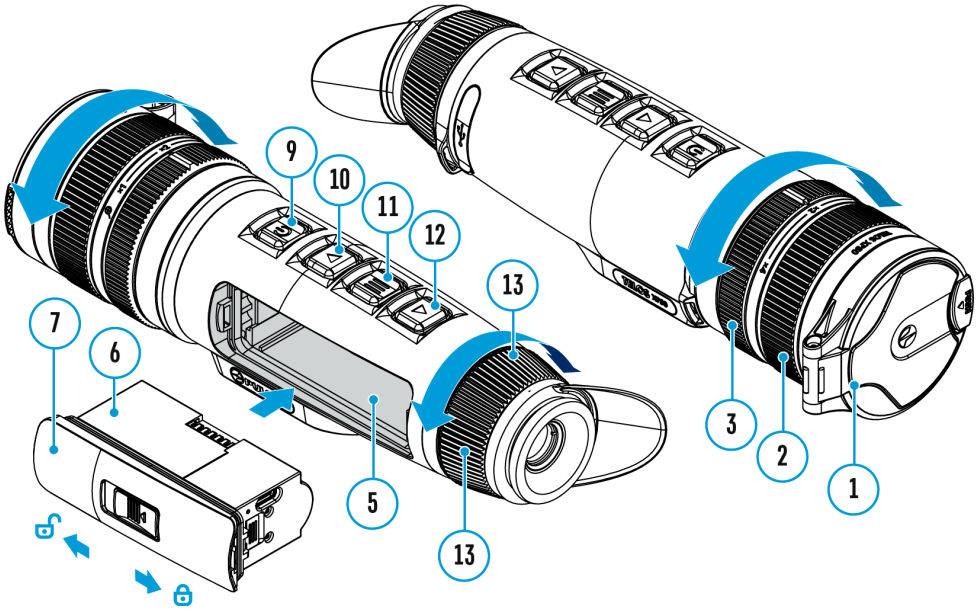

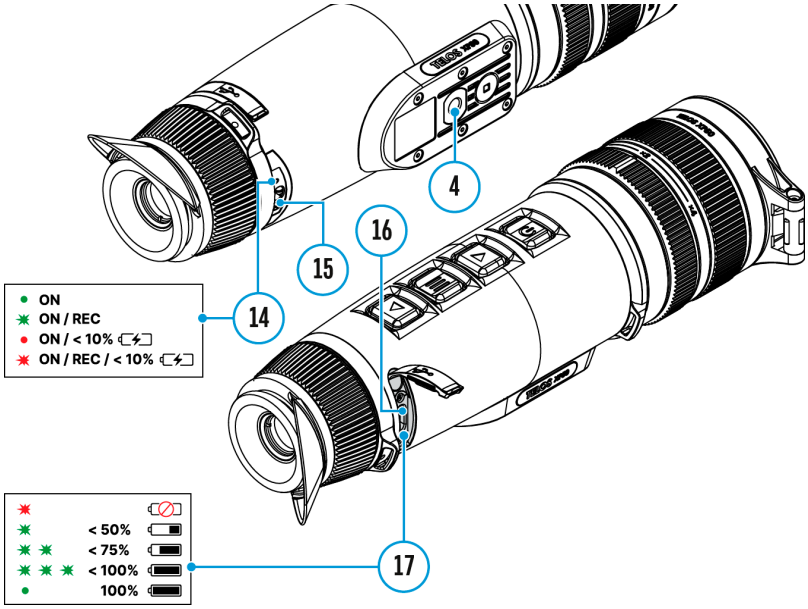

The **PiP** (Picture-in-Picture) function allows you to see both the main image and a magnified image in a dedicated window.

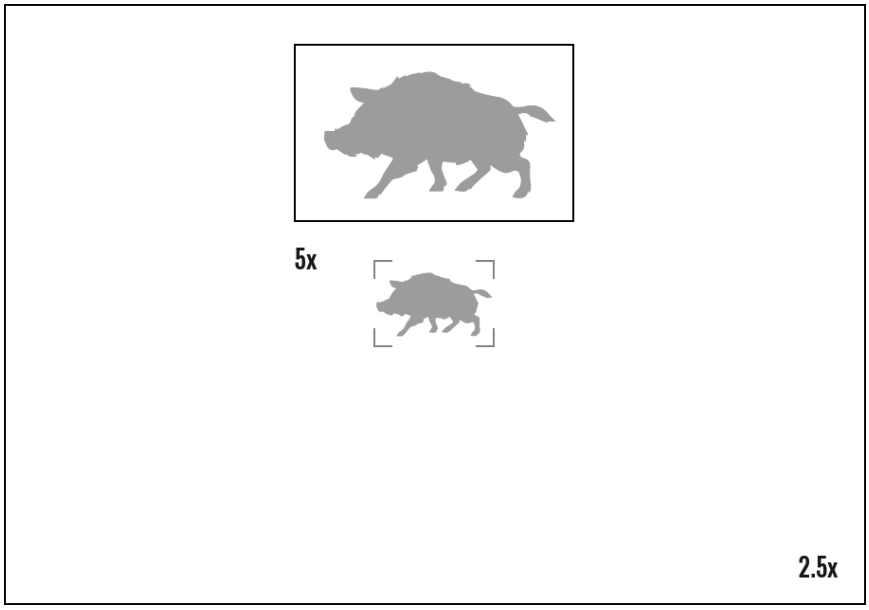

- To turn on and off the **PiP** function see the **PiP Mode** section.
- Rotate the adjustment ring **(3)** to change the magnification ratio in the **PiP**
- The zoomed image is displayed in a dedicated window, while the image in the rest of the screen is displayed at base magnification (2.5x).
- When the **PiP** is turned on you can control both the discrete and smooth digital zoom. In this case the zoom value changes only take place in the dedicated window.
- When the **PiP** function is turned off, the screen will display at the magnification that was set in **PiP** mode.

Digital Zoom

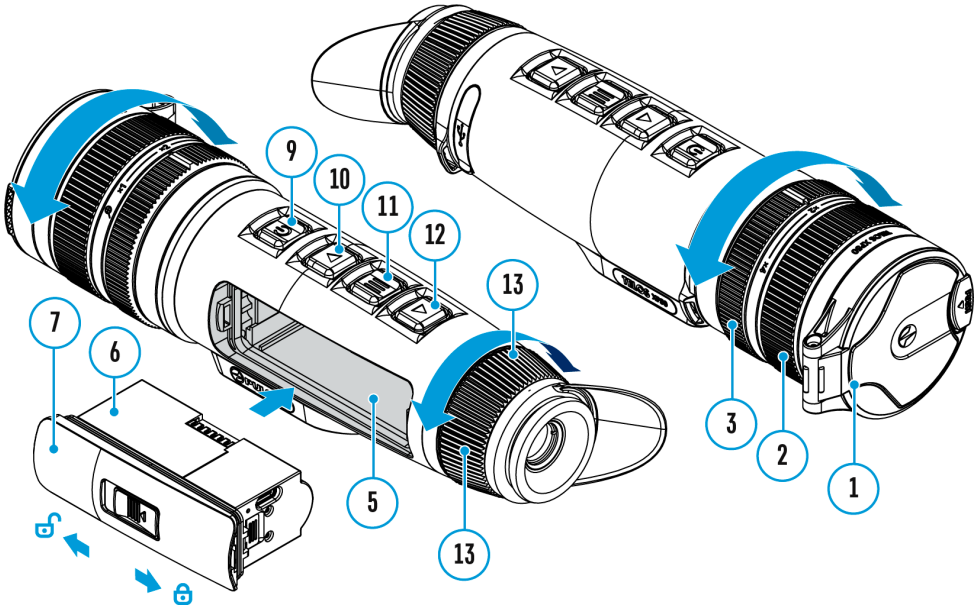

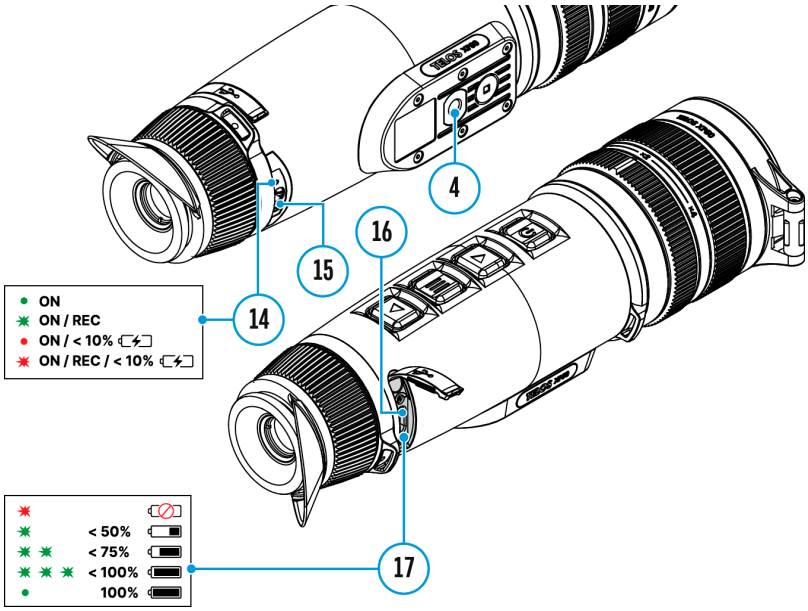

The functionality of the device makes it possible to smoothly increase the base magnification of the device using the adjustment ring **(3)**, as well as return to the base magnification

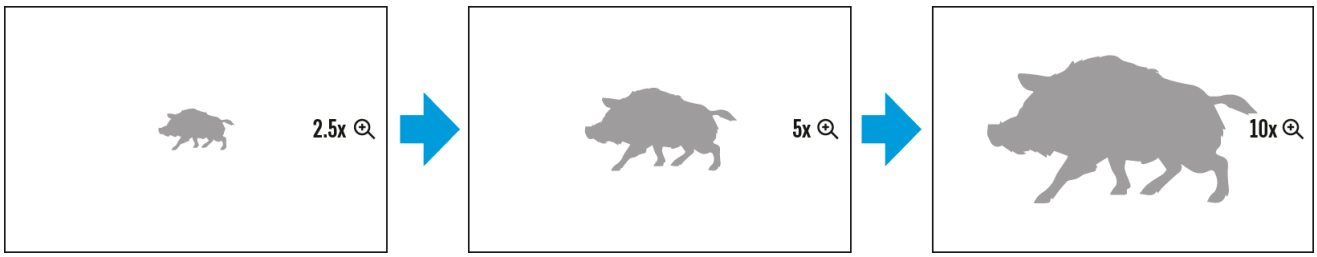

- To increase the digital zoom, turn the adjustment ring **(3)** clockwise.

- To decrease the digital zoom, turn the adjustment ring **(3)** counterclockwise.

Video Recording and Photography

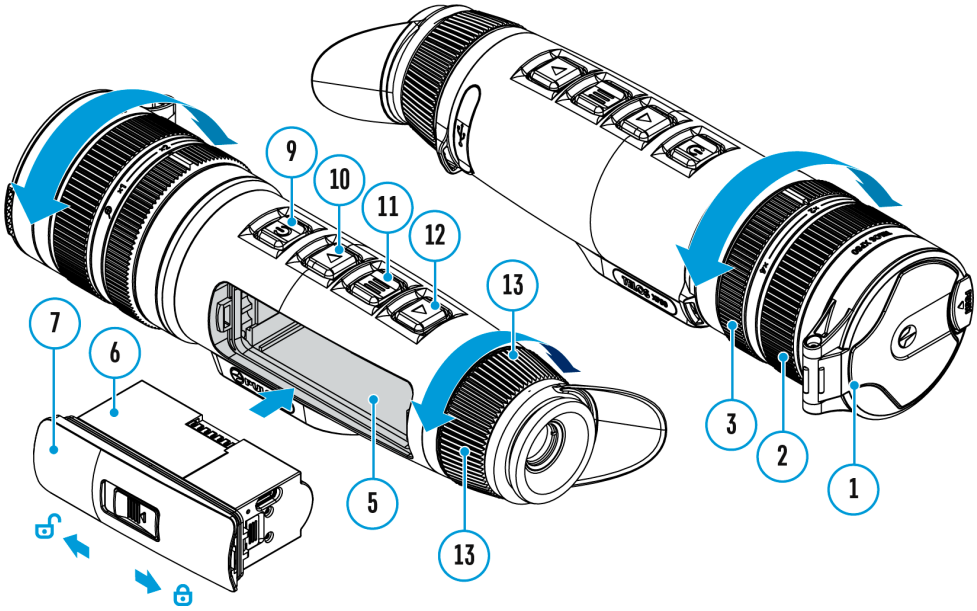

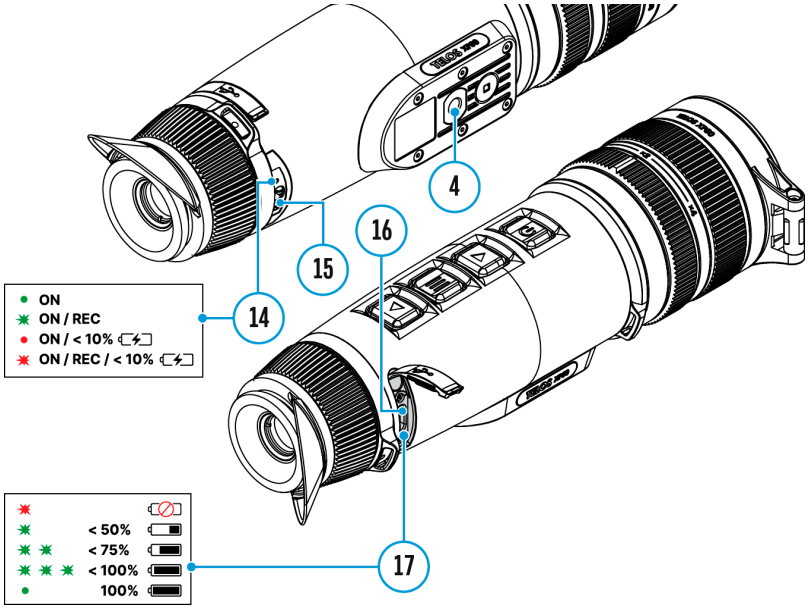

Telos thermal imagers are capable of video recording and photography. Videos and images are saved on the built-in memory card.

Before using this feature please set the **date** and **time.**

The built-in recorder operates in two modes **– Video** and **Photo.**

Video mode. Video recording

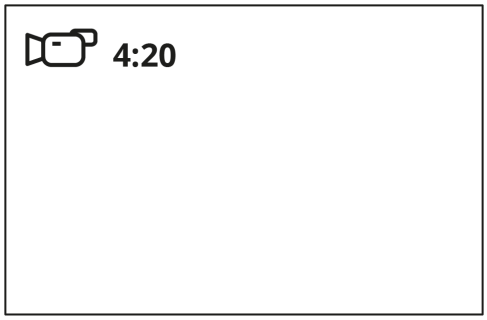

1. Switch to **Video** mode by pressing and holding the **UP/REC (10)** button.

2. The

icon and the remaining recording time in HH:MM (Hours:Minutes) format are displayed in the upper left corner, for example 4:20.

3. Press the **UP/REC (10)** button briefly to start video recording.

4. When the video recording starts, the icon

will disappear and the REC icon and timer in MM:SS (Minutes:Seconds) format will appear

●REC | 00:25

.

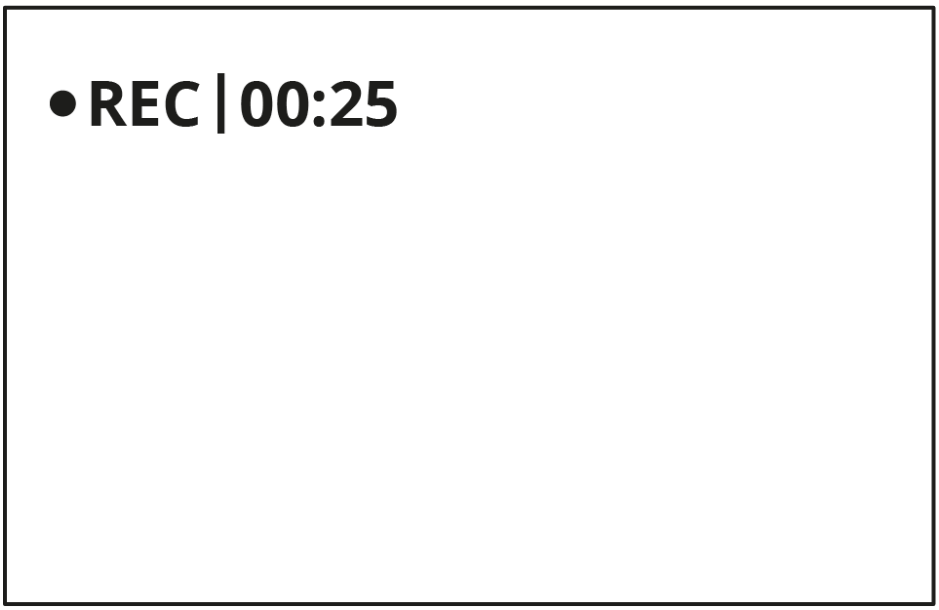

5. Pause and resume recording video with a short press of the **UP/REC (10)** button.

6. Stop recording video with a long press of the **UP/REC (10)** button.

7. Video files are saved to the built-in memory card after the video recording has been stopped.

8. Press and hold the **UP/REC (10)** button to switch between the **Video** and **Photo** modes (Video→ Photo→ Video...).

Photo Mode. Capturing an image

1. Switch to the **Photo** mode by pressing and holding the **UP/REC (10)** button.

2. Press the **UP/REC (10)** button briefly to take a photo. The icon

flashes – the photo file is being saved to the built-in SD card.

Notes:

- You can enter and operate the menu during video recording.
- Recorded videos and photos are saved to the internal memory card in the format img_xxx.jpg (photos), video_xxx.mp4 (videos).
- Videos are recorded in clips with a maximum duration of 5 minutes. The number of recorded files is limited by the capacity of unit's internal memory and video compression ratio.
- Regularly check the free capacity of the internal memory and move recorded footage to other storage media to free up space on the internal memory card.
- In case of a memory card error, you can use the format function in the **General Settings** section of the main menu.
- When the **Display Off** function is activated, video recording continues to run in the background.

Software

Firmware Update

1. Download the free Stream Vision 2 App in **Google Play** or **App Store**.
2. Connect your Pulsar device to your mobile device (smartphone or tablet).
3. Launch Stream Vision 2 and go to section “Settings”.
4. Select your Pulsar device and press “Check firmware update”.
5. Wait for the update to download and install. Pulsar device will reboot and will be ready to operate.

Important:

- if your Pulsar device is connected to a phone or mobile device, please turn on mobile data transfer (GPRS/3G/4G) to download update;
- if your Pulsar device is not connected to your phone or mobile device but is already listed in “Settings” > “My devices” section, you may use Wi-Fi to download update.

Is your firmware up to date?

Click **here** to check the latest firmware for your device.

Stream Vision 2

Install the Stream Vision 2 application to download files, update firmware, control the device by remote control and broadcast images from your device to a smartphone or a tablet via WiFi.

We recommend using the latest version – Stream Vision 2.

Mobile App

STREAM VISION 2

You can find further guidelines on Stream Vision 2 **here.**

Download from Google Play

Download from App Store

Maintenance

Technical Maintenance and Storage

Maintenance should be carried out at least twice a year and should include the following steps:

- Wipe the exterior surfaces of metal and plastic parts with a cotton cloth. Do not use chemically active substances, solvents, etc. as these will damage the paint.
- Clean the electric contacts of the Battery Pack and the device's battery slot using a non-greasy organic solvent.
- Check the objective and eyepiece lenses and if required, remove dust and sand from the optics (it is preferable to use a non-contact method). Cleaning of the exterior surfaces of the optics should be done with cleaners designed especially for this purpose.
- Store the device in a carrying case. Remove the Battery Pack for long-term storage.

Technical Inspection

It is recommended to inspect your device before each use. Check the following:

- The device should be free of any cracks or deformations.
- The lenses should be free of cracks, grease, dirt or debris.
- The battery level of the device should be full. Electrical sockets should be free of salts, oxidation, or other debris.
- All controls should be responsive.

Troubleshooting

For technical support please contact support@pulsar-vision.com.

Answers to frequently asked questions about the devices can also be found in the FAQ section.

The device does not turn on

Possible cause

Battery Pack is discharged.

Solution

Charge the Battery Pack.

Device malfunction

Solution

In case of any malfunctions during operation, try resetting the device by long pressing the ON/OFF button for 10 seconds.

The device does not operate from an external power source

Possible cause

The USB cable is damaged.

Solution

Replace the USB cable.

Possible cause

The external power supply is discharged.

Solution

Charge the external power supply (if necessary).

The image is blurry, with vertical stripes or an uneven background

Possible cause

Calibration is required.

Solution

Perform the calibration according to **Calibration Mode** section.

Black screen after calibration

Solution

If the image does not clear after calibration, you need to recalibrate.

When the device is turned on, the calibration frequency is at first higher, then decreases (if the automatic calibration mode is enabled)

Possible cause

After turning on the device, it takes some time for the sensor temperature to stabilize. This is normal and is not a defect.

Poor quality image. There is noise or ghost images of previous scenes or objects

Possible cause

Manual calibration has been performed with the lens cover open.

Solution

Check the **Calibration Mode**, close the lens cover and calibrate the device.

The image is too dark

Possible cause

Brightness or contrast level is too low.

Solution

Adjust the brightness or contrast level in the **Quick Menu.**

Colour bars appear on the display or the image disappears

Possible cause

The device was exposed to static electricity during operation.

Solution

After exposure to static electricity, the device may either reboot automatically or require turning off and on again.

The image of the object being observed is missing

Possible cause

The object is behind glass, which obstructs thermal vision.

Solution

Remove the glass.

Poor image quality / Detection range reduced

Possible cause

These problems may occur during observation in adverse weather conditions (snow, rain, fog, etc.).

Smartphone or tablet PC cannot be connected to the device

Possible cause

Device password has been changed.

Solution

Delete the network and connect again using the password saved in the device.

Possible cause

The device is in an area with too many Wi-Fi networks that may be causing signal interference.

Solution

To ensure a stable Wi-Fi connection, relocate the device to an area with fewer or no Wi-Fi networks.

Possible cause

The device has a 5 GHz network enabled, but the smartphone only supports 2.4 GHz.

Solution

Switch the device's Wi-Fi bandwidth to 2.4 GHz.

Wi-Fi signal is missing or interrupted

Possible cause

Smartphone or tablet is out of range of a strong Wi-Fi signal. There are obstacles between the device and the smartphone or tablet (e.g., concrete walls).

Solution

Relocate smartphone or tablet into the Wi-Fi signal line of sight.

The image quality during the device operation at below zero temperatures is worse than at positive temperatures

Possible cause

In warm climates, objects in the background of a thermal image heat up differently because of thermal conductivity, generating a high temperature contrast and a sharper thermal image.

In cold climates, objects in the background of a thermal image will cool down to roughly the same temperature, which leads to a greatly reduced temperature contrast and a degraded image quality. This is normal for all thermal imaging devices.